Model V12 FLOTECT® Flow Switch

Specifications – Installation and Operating Instructions

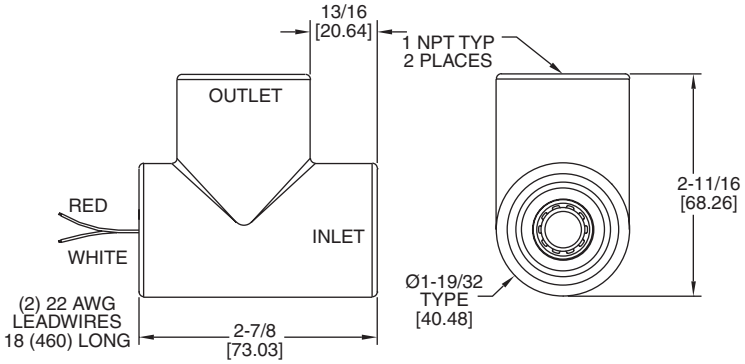

INSTALLATION

1. **CAUTION:** Mechanical shock or vibration can cause permanent damage to the reed switch. Take care to avoid dropping the unit on hard surfaces or impacting the switch assembly.

2. Liquid media containing particulate and/or debris should be filtered to ensure proper operation of the V12 Flow Switch.

3. Apply Teflon® thread tape or sealant to the 1″ male NPT pipe threads and install the switch into the piping system. Thread the flow switch onto the male pipe thread until hand-tight. Tighten pipe 1 additional turn. If improper seal results, continue turning pipe into unit 1/4-turn increments. **Do Not** Exceed 1 Additional Turn.

4. Connect wiring in accordance with local electrical codes.

5. Inductive, capacitive, and lamp loads can all create conditions harmful to the reed switch.

A) Inductive loads can be caused by electromagnetic relays, electromagnetic solenoids, and electromagnetic counters, all with inductive components as the circuit load.

B) Capacitive loads can be caused by capacitors connected in series with or parallel to the reed switch. In a closed circuit the cable length (150 ft. [1.5 m] or more) to the switch can introduce a capacitance.

C) Lamp loads can be caused by switching lamp filaments, which have low cold resistance.

In addition to these causes, exceeding any of the maximum electrical ratings can lead to premature or immediate failure. This includes inrush and surge currents greater than the maximum switching current. Use caution when evaluating system loads and current. To accommodate these conditions, see diagrams on the reverse, which depict possible solutions.

STANDARD MODELS

Model Number	Switch Activation Set Point on Increasing Flow (water), Vertical up Direction	
	Gal. per minute	Liters per minute
V12-2	0.5 GPM	1.892
V12-3	1.0 GPM	3.785
V12-4	2.5 GPM	9.462
V12-5	5.0 GPM	18.924

Teflon® is a registered trademark of E.I. du Pont de Nemours and Company.
Noryl® is a registered trademark General Electric Company.

PHYSICAL DATA

Wetted Materials

Housing and Shuttle: Noryl® GFN3 (Polyphenylene Ether and Polystyrene).
Spring: 316 Stainless Steel.
Retaining Clip: PH 15-7 Mo Stainless Steel.
Activation Magnet: Ceramic 1.

FDA Approved Wetted Materials Option

Housing and Shuttle: Noryl® GFN3 (Polyphenylene Ether and Polystyrene).
Spring: 316 Stainless Steel.
Retaining Clip: PH 15-7 Mo Stainless Steel.
Activation Magnet: Teflon®.

Operating Pressure (Maximum): 100 PSIG (690 kPa) @ 70°F (21°C). 50 PSIG (345 kPa) @ 194°F (90°C).
Operating Temperature: 194°F (90°C) Maximum.
Set Point Accuracy: ± 20%.
Set Point Differential: 20% Maximum.
Switch: SPST normally open reed switch.

Electrical Rating: 1.5A, 24 VDC resistive, (0.001A, 200 VDC resistive), 0.5A, 125 VAC.
Wire: 22 AWG, 18″ (460 mm) long.
Inlet/Outlet Ports: 1″ female NPT.
Weight: 4.2 oz. (119 grams).
Agency Approval: UL 508, recognized component.

Note: Standard units are designed with springs for positive return of the shuttle at no-flow condition. This allows the flow switch to be mounted in any orientation, but actuation set points vary from stated values. Contact the factory for further information.

W.E. ANDERSON DIV., DWYER INSTRUMENTS, INC.
P.O. BOX 358 • MICHIGAN CITY, INDIANA 46361 U.S.A.
Phone: 219/879-8000
Fax: 219/872-9057
Lit-by-Fax: 888/891-4963
www.dwyer-inst.com
e-mail: info@dwyer-inst.com

CIRCUIT INFORMATION FOR REED SWITCH PROTECTION

Read information below before installing your new reed switch control!

Exceeding the current capacity of this Reed Switch control may cause FAULTY OPERATION! Be aware of the inductive and capacitive or lamp loads you may be placing on your Reed Switch Control. The circuits below outline possible solutions to preventing overloads due to inrush or surge currents exceeding maximum or when the switch current and product of the inductive back EMF exceed the switch's power rating. Also the circuit for prevention of overload when switching filament lamps (low "cold" resistance) is outlined below. Failure to follow these measures to protect Reed Switch Contacts may cause the contacts to weld together or result in premature wear.

Possible Circuit Solutions Indicated by Dashed Lines

Inductive Loads

Possible causes –

An electromagnetic relay, electromagnetic solenoid, electromagnetic counter with inductive component as circuit load.

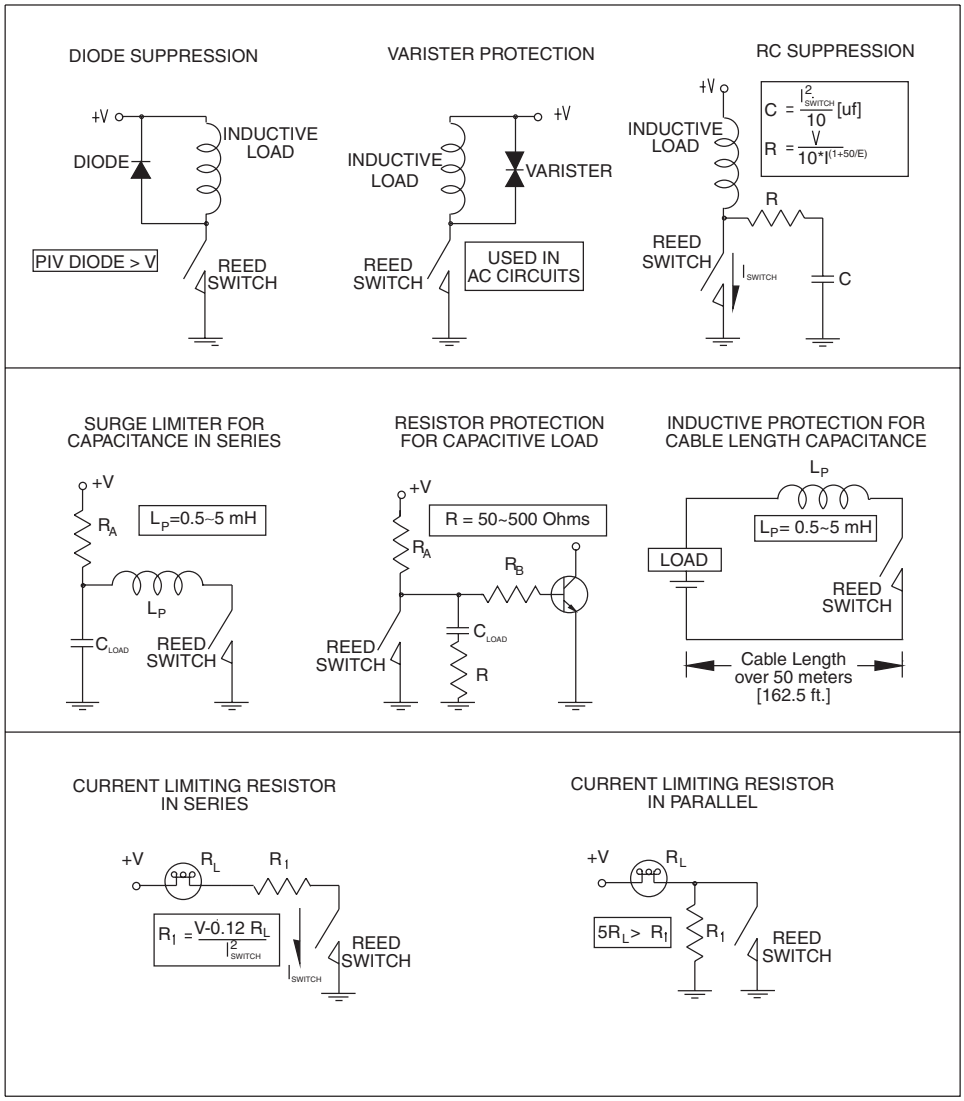

Capacitive Loads

Possible causes –

A capacitor connected in series or parallel with Reed Switch control. In a closed circuit, a cable length (usually greater than 50m [162.5 ft.]) used to connect reed switch may also introduce static capacitance.

Lamp Loads

Possible causes –

A tungsten filament lamp load.

Do not subject reed switch control to excessive shock and vibration, including:

—Bending or placing force loads on reed switch housing.

—Placing pull-out force on load wires.

MAINTENANCE

A periodic check to confirm actuation/deactuation is recommended. These units are not field repairable and should be returned to the factory if service is required. After first obtaining a Returned Goods Authorization (RGA) number, send the unit, freight prepaid to the following address. Please include a clear description of the problem plus any application information available.

W.E. Anderson Division
Dwyer Instruments, Inc.
Attn: Repair Department
102 Highway 212
Michigan City, IN 46360

Printed in U.S.A. 12/01 FR# 82-443170-00 Rev.1

W.E. ANDERSON DIV., DWYER INSTRUMENTS, INC.
P.O. BOX 358 • MICHIGAN CITY, INDIANA 46361 U.S.A.

Phone: 219/879-8000
Fax: 219/872-9057
Lit-by-Fax: 888/891-4963

www.dwyer-inst.com
e-mail: info@dwyer-inst.com