Turbine Flow Meter

Model 1100

DESCRIPTION

The Model 1100 Turbine Flow Meter is designed to withstand the demands of the most rigorous flow measurement applications. Originally developed for the secondary oil recovery market, the Model 1100 is an ideal meter for liquid flow measurement on or off the oilfield.

The meter features a rugged 316 stainless steel housing and rotor support assemblies, CD4MCU stainless steel rotor, and abrasive-resistant tungsten carbide rotor shaft and journal bearings. The Model 1100 maintains measurement accuracy and mechanical integrity in the corrosive and abrasive fluids commonly found in oil field water flood projects and many industrial applications.

Designed to operate with the Model B2800 Flow Monitor, the Model 1100 turbine meter meets a wide range of measurement requirements. This makes it ideal for applications such as pipelines, production/injection fields, in-situ mining operations, offshore facilities, and other industrial applications.

FEATURES

- Offers accurate and repeatable flow measurement in ranges from 0.6…5000 gmp (20…171,000 bpd)
- Cost-effective solution for turbine flow meter applications
- Rugged 316 stainless steel construction offers long service life in severe operating environments
- Available in NPT, BSP, Victaulic®, flange, or hose barbed end connections
- NIST traceable calibration
- Installation in pipe sizes from 1/2…10 in. Integrate electronically with B2800 Flow Monitor,
- K-factor Scaler, or the F to I/F to V Intelligent Converter Field replaceable repair kits allow for turbine replacement without loss of accuracy

INSTALLATION

The Model 1100 Turbine Meter is simple to install and service. It operates in any orientation (horizontal to vertical) as long as the "flow direction" arrow is aligned in the same direction as the actual line flow. For optimum performance, the flow meter should be installed with a minimum of 10 diameters upstream straight pipe length and 5 diameters downstream straight pipe length.

OPERATING PRINCIPLE

Fluid entering the meter passes through the inlet flow straightener which reduces its turbulent flow pattern and improves the fluid's velocity profile. Fluid then passes through the turbine, causing it to rotate at a speed proportional to fluid velocity. As each turbine blade passes through the magnetic field at the base of the transducer, an AC voltage pulse is generated in the pickup coil. These pulses produce an output frequency proportional to the volumetric flow through the meter.

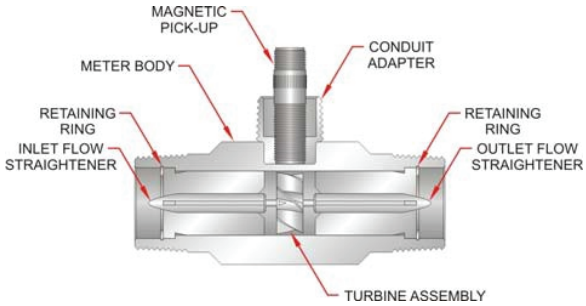

Badger Meter

TRB-DS-01217-EN-01 (November 2014)

Product Data Sheet

K-FACTOR

The K-factor represents the number of output pulses transmitted per gallon of fluid passing through the turbine meter. Each turbine has a unique K-factor. However, turbine meters are not functionally consistent throughout the full flow range of the meter.

There are several forms of friction inherent in the turbine meters that retard the rotational movement of the turbine rotor. These frictional forces include: magnetic drag, created by electromagnetic forces of pickup transducers; mechanical drag, due to bearing frction; and viscous drag, produced by flowing fluid.

As flow increases, the frictional forces are minimized and the free-wheeling motion of the turbine rotor becomes more linear (proportional to flow). The K-fator becomes relatively constant and the linear throughout the balance of the linear flow range. This is approximately a 10:1 turndown ratio from the maximum flow rate down to the minimum flow rate.

Typical K-factor Curve (Pulse per US Gallon)

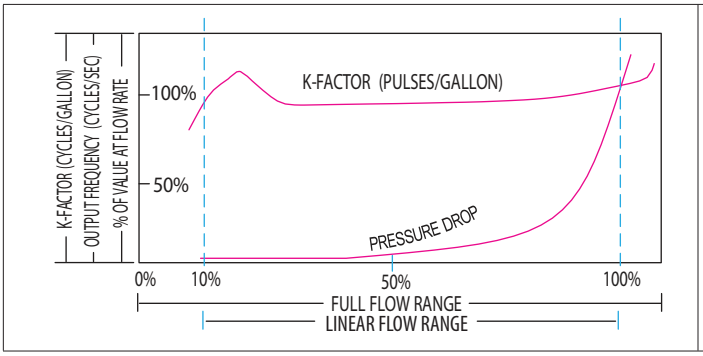

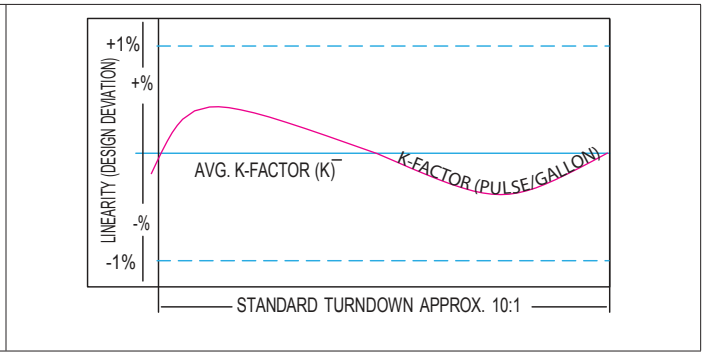

SPECIFICATIONS

Materials of Construction	**Body**	316 stainless steel
	Rotor	CD4MCU stainless steel
	Rotor Support	316 stainless steel
	Rotor Shaft	Tungsten carbide
Turndown Ratio	10:1	
Flow Accuracy	±1% of reading for 7/8 in. and larger meters	
	±1% of reading over the upper 70% of the measuring range for 3/8, 1/2, and 3/4 in. meters	
Repeatability	±0.1%	
Calibration	Water (NIST traceable calibration)	
Pressure Rating	5000 psi max.	
Turbine Temperature	–150…350° F (–101…177° C)	
End Connections	NPT, BSP, Victaulic®, flange, hose barbed	
Certifications	CSA Class I Div 1, Groups C & D Class II Div 1, Groupis E, F & G: intrinsically safe*	
	CSA Clas I Div 1 Groups C,D; complies to UL 1203 and CSA 22.2 No. 30	
	Met Labs File No. E112860 (for explosion proof models only)	

* Contact factory for ordering options

Bore Size	End Connections	Max. psi	Flow Ranges			Strainer	Approx. K-factor	Meter Weight	End to End Length
			GPM (LPM)	BPD	M^3/D	Mesh	Pulse/Gal		
3/8 in. (9.5 mm)	1/2 in. male NPT	5000	0.6…3 (2.3…11.4)	20…100	3.3…16	60	18000	1	3 in. (76.2 mm)
1/2 in. (12.7 mm)	1/2 in. male NPT	5000	0.75…7.5 (2.8…28.4)	25…250	4.1…41	60	13000	1	3 in. (76.2 mm)
3/4 in. (19.1 mm)	1/2 in. male NPT	5000	2…15 (7.6…56.7)	68…515	10.9…81.75	60	3300	1	3 in. (76.2 mm)
3/8 in. (9.5 mm)	1 in. male NPT	5000	0.6…3 (2.3…11.4)	20…100	3.3…16	60	18000	2	4 in. (101.6 mm)
1/2 in. (12.7 mm)	1 in. male NPT	5000	0.75…7.5 (2.8…28.4)	25…250	4.1…41	60	13000	2	4in. (101.6 mm)
3/4 in. (19.1 mm)	1 in. male NPT	5000	2…15 (7.5…56.7)	68…515	10.9…81.75	60	3300	2	4 in. (101.6 mm)
7/8 in. (22.2 mm)	1 in. male NPT	5000	3…30 (11.4…113.6)	100…1000	16…160	60	3100	2	4 in. (101.6 mm)
1 in. (25.4 mm)	1 in. male NPT	5000	5…50 (18.9…189.3)	170…1700	27.25…272.5	40	870	2	4 in. (101.6 mm)
1-1/2 in. (38.1 mm)	1-1/2 in. male NPT	5000	15…180 (56.8…681.4)	515…6000	82…981	20	330	5	6 in. (152.4 mm)
1-1/2 in. (38.1 mm)	2 in. male NPT	5000	15…180 (56.8…681.4)	515…6000	82…981	20	330	6	6 in. (152.4 mm)
2 in. (50.8 mm)	2 in. female NPT	5000	40…400 (151.4…1514.2)	1300…13000	218…2180	20	52	14	10 in. (245 mm)
3 in. (76.2 mm)	3 in. grooved end	800	60…600 (227.1…2271.2)	2100…21000	327…3270	10	57	15	12-1/2 in. (317.5 mm)
4 in. (101.6 mm)	4 in. grooved end	800	100…1200 (378.5…4542.5)	3400…41000	545…6540	10	29	20	12 in. (304.8 mm)
6 in. (152.4 mm)	6 in. grooved end	800	200…2500 (757.1…9463.5)	6800…86000	1090…13626	4	7	46	12 in. (304.8 mm)
8 in. (203.2 mm)	8 in. grooved end	800	350…3500 (1324.9…13248.9)	12000…120,000	1363…19076	4	3	56	12 in. (304.8 mm)
10 in. (254 mm)	10 in. grooved end	800	500…5000 (1892.7…18927.1)	17000…171,000	2725…27252	4	1.6	80	12 in. (304.8 mm)

Control. Manage. Optimize.

Blancett is a registered trademark of Badger Meter, Inc. Other trademarks appearing in this document are the property of their respective entities. Due to continuous research, product improvements and enhancements, Badger Meter reserves the right to change product or system specifications without notice, except to the extent an outstanding contractual obligation exists. © 2014 Badger Meter, Inc. All rights reserved.

www.badgermeter.com

The Americas | Badger Meter | 4545 West Brown Deer Rd | PO Box 245036 | Milwaukee, WI 53224-9536 | 800-876-3837 | 414-355-0400
México | Badger Meter de las Americas, S.A. de C.V. | Pedro Luis Ogazón N°32 | Esq. Angelina N°24 | Colonia Guadalupe Inn | CP 01050 | México, DF | México | +52-55-5662-0882
Europe, Middle East and Africa | Badger Meter Europa GmbH | Nurtinger Str 76 | 72639 Neuffen | Germany | +49-7025-9208-0
Europe, Middle East Branch Office | Badger Meter Europe | PO Box 341442 | Dubai Silicon Oasis, Head Quarter Building, Wing C, Office #C209 | Dubai / UAE | +971-4-371 2503
Czech Republic | Badger Meter Czech Republic s.r.o. | Maříkova 2082/26 | 621 00 Brno, Czech Republic | +420-5-41420411
Slovakia | Badger Meter Slovakia s.r.o. | Racianska 109/B | 831 02 Bratislava, Slovakia | +421-2-44 63 83 01
Asia Pacific | Badger Meter | 80 Marine Parade Rd | 21-06 Parkway Parade | Singapore 449269 | +65-63464836
China | Badger Meter | 7-1202 | 99 Hangzhong Road | Minhang District | Shanghai | China 201101 | +86-21-5763 5412

Legacy Document Number: Form No. 1100